How does USB-inSync™ Transform the USB port into a Precision Instrumentation Bus?

Introduction to USB-inSync™

USB-inSync™ is a revolutionary technology which adds highly accurate timing and synchronisation to the already powerful Universal Serial Bus (USB). While preserving all the features of USB, the enhanced capability of USB-inSync™ enables new applications and solutions never before possible. USB-inSync™ has transformed the fundamental properties of USB and opened up a new range of possibilities. It will become the solution of choice for PC I/O applications where portability, expandability, synchronous performance, and cost are significant considerations.

ChronoLogic's USB-inSync™ specification defines a rugged PC-based I/O platform for test, measurement and automation systems. USB-inSync™ builds upon the USB specification that has become the preferred connectivity standard for portable, office and home computer environments. USB-inSync™ is an extension to USB that combines the widespread inter-compatibility features of USB with the advanced timing and software features required for an industrial PC I/O communication platform. These advances open up a new world of possibilities in the development of synchronised systems for distributed test and measurement, data acquisition, automation and manufacturing applications.

Features and Benefits of USB

USB is by far the most popular PC interface, dominating the peripheral connectivity market with a solution to almost every application requiring external connection between computers and peripheral devices. USB is ubiquitous in desktop and notebook PC's which ensures widespread interoperability of USB devices. USB is the interface of choice for an amazing array of consumer devices, and instrumentation USB products enter the market daily. The well-known advantages of the standard USB specification are summarised as follows:

- Hi-Speed 480Mbps bandwidth - USB 2.0 (5.0Gbps - USB 3.0)
- Hot-swappable, plug-n-play operation
- Reliability is assured through automatic error recovery protocols
- Expansion via inexpensive tiered star topology
- Widespread low cost, ubiquitous USB interface

USB is a serial bus designed to operate in a point-to-point, PC-centric host-to-slave configuration. The USB standard defines an expandable PC interface that can control up to 127 devices (including expansion hubs) from a single USB Host Controller on a PC. Expansion hubs typically have 7 expansion ports and can be connected to other hubs in any random topology the user desires. For a detailed and in-depth presentation of USB refer to Jan Axelson's excellent book, *USB Complete,* (2001) Lakeview Research.

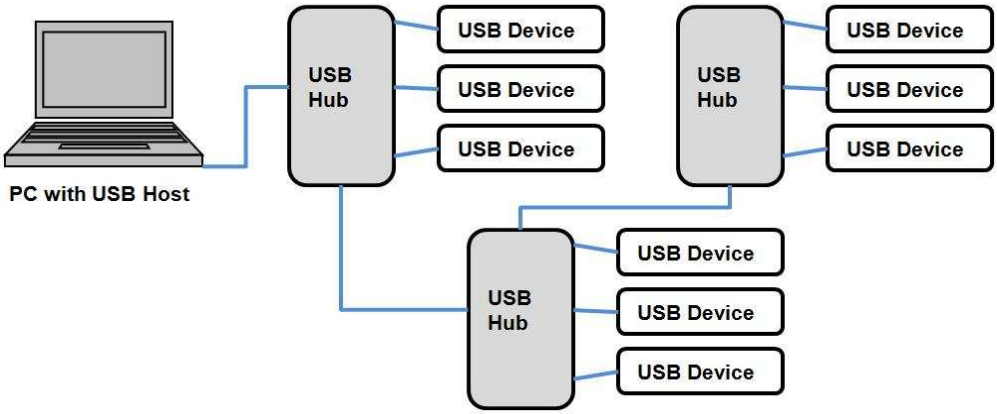

Synchronisation & Determinism

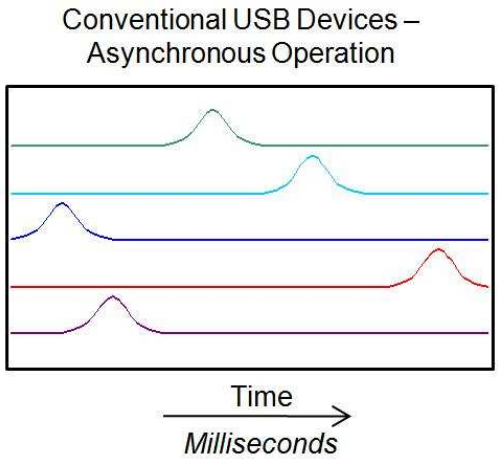

USB was designed to concurrently operate multiple devices that vary in nature and function. To accomplish this USB is an "asynchronous" bus which allows multiple devices to sequentially interact with the Host PC. As a consequence, USB has a very limited capacity to synchronise events or processes on multiple devices. Typical USB devices can barely synchronise data streams on millisecond time scales (see right).

As an asynchronous bus standard USB has no provision for providing accurate timing information to multiple devices. Standard USB is therefore unsuitable for precision applications. The clock error depicted in the Figure above increases as the physical distance between devices increases. In fact, the clock error is further increased with the use of standard expansion hubs. With the standard USB framework there is no ability to provide synchronous real-time control or data acquisition for applications such as test, measurement, control and automation.

USB devices make use of existing computer infrastructure for a large range of applications in a simple, reliable, and cost effective manner. Unfortunately for designers of test & measurement, data acquisition and control and automation systems, the asynchronous operation of standard USB presents an insurmountable obstacle, until now. Despite the lack of synchronisation with conventional USB there has been strong and growing demand for instrumentation based on USB. USB-inSync™ offers the solution to these shortcomings and provides the impetus for massive growth in USB instruments via its precision synchronisation, deterministic operation and opportunities as a hybrid test platform.

What is USB-inSync™?

ChronoLogic has developed the USB-inSync™ technology to transform conventional USB into a synchronous, deterministic and expandable control platform. Such capabilities were never envisaged by the inventors of USB. USB-inSync™ devices are USB compatible and possess all the standard connectivity characteristics of USB. In addition to this, USB-inSync™ devices feature highly accurate synchronisation and deterministic timing capabilities.

Each USB-inSync™ device is equipped with a local clock that is accurately phase locked to that of every other USB-inSync™ device attached to a given Host PC. Furthermore, each device contains its own 'real time' counter that is accurately synchronised to those of every other USB-inSync™ device. A deterministic triggering system is also provided so that processes can be started and stopped in a precisely controlled manner. These two features extend USB beyond the realms of its original concept and allow new synchronisation, control and monitoring possibilities within a distributed PC-based environment.

ChronoLogic has therefore created a powerful extension to USB enabling a range of test & measurement applications which require coordinated multi-device control and data acquisition.

USB-inSync™ guarantees that all local device clocks will be synchronised to within a few nanoseconds of each other when connected to a common expansion hub on similar length cables. This is termed *Passive USB-inSync*™ because the devices automatically lock to each another without the need for any additional equipment.

Passive USB-inSync

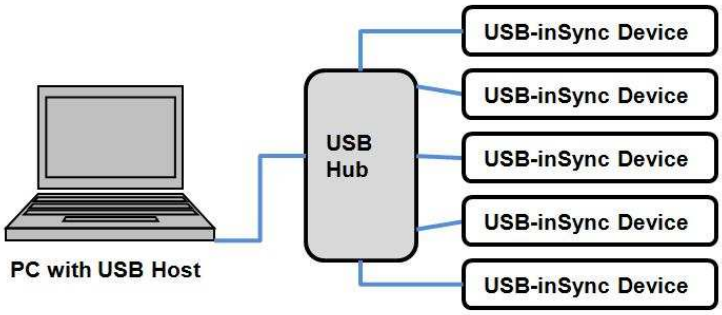

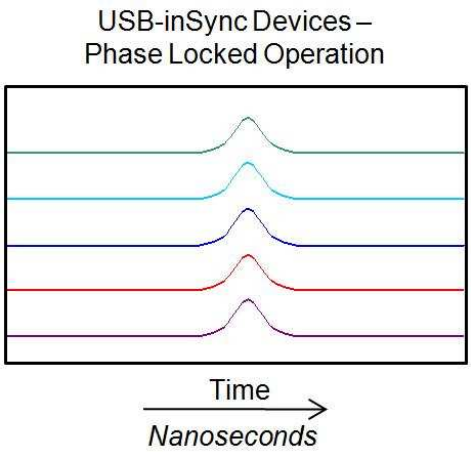

USB-inSync™ devices can be passively locked to within a few nanoseconds of each other by attaching them all to a generic USB expansion hub. USB-inSync™ devices automatically lock their clocks together in frequency, but there may be a small phase offset between clocks when the devices are located at different points along the USB connection tree. The worst case phase offset for a widely distributed Passive USB-inSync™ configuration (devices spread over 30m) is of the order of 300 – 400 ns. Most users will find this perfectly adequate for the vast majority of applications.

Some customers will however require much tighter timing capabilities than this. USB-inSync™ also has the capability to actively compensate for these phase offsets and synchronise all clocks to within ±1ns regardless of their connection location. *Active USB-inSync*™, as it is called, utilises the ChronoLogic USB-inSync™ Master Hub to measure and compensate for the clock phase offset of each device.

Active USB-inSync

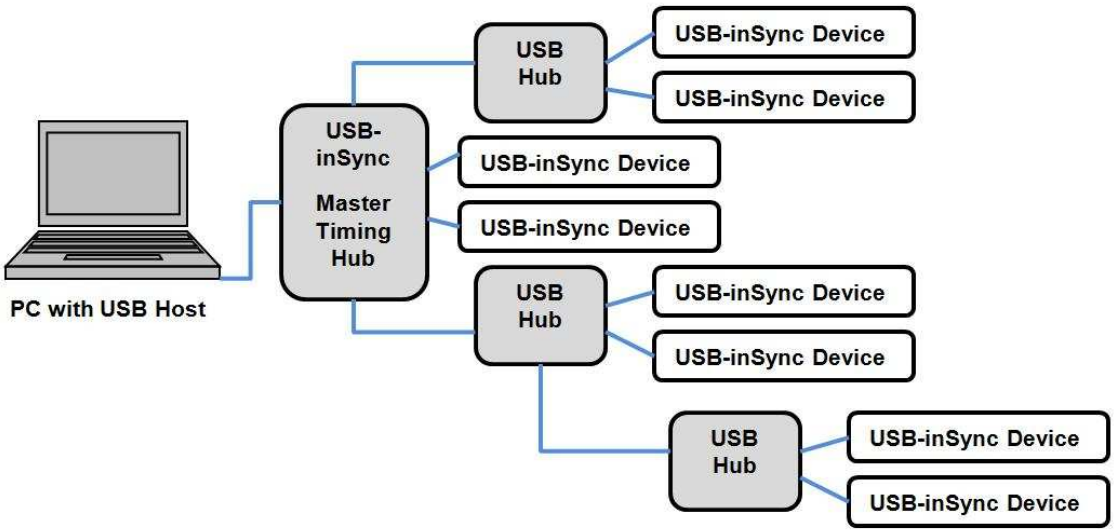

Notice in the above Figure that only one USB-inSync™ Master Hub is depicted. The Master Timing Hub operates as an accurate timing controller to synchronise all device clocks, regardless of the number of standard USB expansion hubs used. The Master Timing Hub determines the phase offset and provides a correction factor to each USB-inSync™ device to ensure all devices operate in complete synchronicity. This occurs automatically during the device enumeration process and is repeated each time a new device is connected to the system, maintaining accuracy while preserving the hot-swap ability of USB. As soon as Windows recognizes the device, it is available for synchronous operation. The use of a ChronoLogic's USB-inSync™ Master Timing Hub enables the tightest timing control of USB-inSync™ devices regardless of their location within your distributed PC I/O system.

USB-inSync™ Hardware Features

The USB-inSync™ hardware specification defines a system whereby each device is provided with accurate clock rate and absolute time information from the host PC. Each USB-inSync™ device has an embedded clock which is accurately phase locked to all other USB-inSync™ device clocks. The key to USB-inSync™ working over standard USB hub and ports is that the hardware platform resides solely in the USB-inSync™ device itself. When combined with the USB-inSync™ software platform full synchronisation and deterministic capabilities can be implemented over standard USB hub architecture.

Every USB-inSync™ device connected to the same generic expansion hub will therefore operate with clocks synchronised to within a few nanoseconds, however devices connected at different levels of the USB hub tree will be subject to a small phase offset. While a minor phase offset is adequate for the vast majority of applications, USB-inSync™ provides the possibility to all but eliminate this offset. The use of ChronoLogic's Master Timing Hub ensures accurate clock phase compensation to within ±1ns, regardless of the device's position within the USB network. USB-inSync™ also defines a deterministic triggering system with events on different devices triggered within the same ±1ns tolerance.

The ChronoLogic engineering team has developed USB-inSync™ as a future open PC I/O platform so the possibilities for enabling test & measurement devices with expandable, synchronous, reliable, and cost effective control are unlimited. Most importantly, USB-inSync™ works over the standard USB bus and complies with the normal USB protocol. This means that USB-inSync™ devices will operate side by side with standard USB devices and over inexpensive standard USB hubs and cables.

USB-inSync™ Software Features

The USB-inSync software platform is based on our multiple device threaded digital I/O command infrastructure. An easy to use Graphical User Interface (GUI) is included that empowers the user to start acquiring data from ChronoLogic USB-inSync™ enabled devices within minutes of opening the box. Advanced users are provided with access to extended low-level device functionality through our COM Server. This enables interfacing through Windows based software application including MS Office, Visual Studio and National Instruments LabVIEW™. Additional LabVIEW™ device drivers are available so that USB-inSync™ devices can be quickly implemented within an existing test environment. OEM users benefit from the flexibility of multiple software interfaces to create application specific solutions.

The software platform features are summarised as:

- Fully compatible with USB2.0 driver specification
- COM Server interface for end user customisation
- Drivers for industry standard interfaces such as LabVIEW™
- Links multiple USB-inSync™ modules with multiple concurrent software applications.
- Enables complete USB-inSync™ functionality
- Includes Registration Manager, Message Processor, Event Handler
- Threaded I/O processing for synchronous sampling or deterministic control applications

* LabVIEW™ is a registered trademark of National Instruments

Summary

ChronoLogic has transformed the consumer USB port, available on every PC and laptop, into a high bandwidth, synchronous and distributed instrumentation bus. We use the existing bus traffic to distribute highly accurate clock information to each device utilising data structures already present on the bus. The process operates with complete transparency and does not affect normal USB operation. USB-inSync™ represents the future of PC-based I/O suitable for automation, control, data acquisition and test & measurement applications with cutting edge performance and the ubiquity of USB.

USB-inSync™ is a platform that offers the synchronous and deterministic accuracy of rack-based systems such as PXI but in a distributed, PC-based format. ChronoLogic has succeeded in developing a new synchronous instrumentation bus capable of interfacing over 100 devices directly through the PC's USB port. This bus allows each attached device to operate with its own synchronous clock accurate to better than ±1 nanoseconds. USB-inSync™ devices can also be operated in a deterministic manner with an event triggering temporal resolution of better than ±1 nanoseconds, regardless of their position within the distributed system.

There are numerous test and measurement applications which can benefit from the simplicity, reliability, and cost savings that ChronoLogic's USB-inSync™ technology offers. Current products and methods require new solutions that offer increased computer integration. USB-inSync™ enables users to leverage existing computer infrastructure and provide distributed, synchronous and deterministic multi-device control.

USB-inSync™ Features:

- Fully compatible with USB
- Nanosecond phase-locking between USB-inSync™ devices on the same USB hub
- Nanosecond phase-compensation between expansion hubs (using ChronoLogic Master Hub)
- Real-time sampling capabilities
- COM Server interfaces with most modern software application

USB-inSync™ Requirements:

- Windows XP Operating Systems or higher
- Intel Pentium III PC or higher
- 512 MB RAM, 30MB hard disk space
- USB2.0 or higher Host Controller
- USB-inSync™ embedded device interface

© ChronoLogic Pty Ltd 2010

WWW.CHRONOLOGIC.COM.AU